MULTI-LOAD WASHERS

ON-PREMISES LAUNDRY – SOFT-MOUNT

ON-PREMISES
MYS55PN pictured

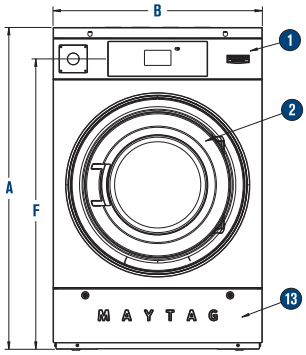

FRONT ELEVATION

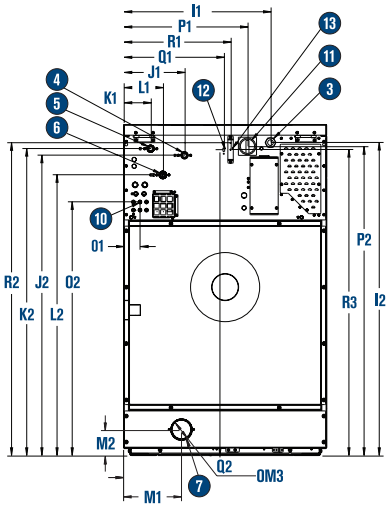

BACK ELEVATION

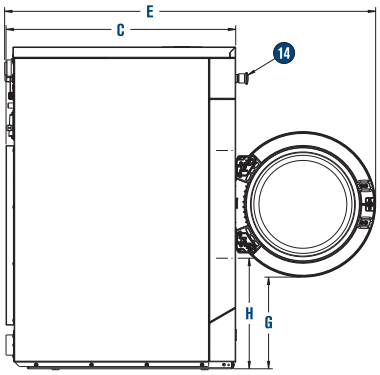

SIDE ELEVATION

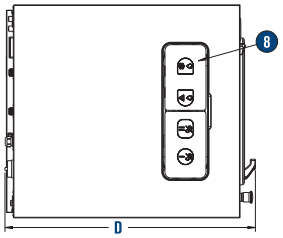

TOP ELEVATION

DIAGRAM KEY

1. Control Console
2. Loading Door
3. Electric Connection
4. Hot Water
5. Cold Water
6. Third Water
7. Drain
8. Soap Dispenser
9. Automatic Liquid Soap Manifold
10. Electric Disconnect
11. USB
12. Fuses
13. Toe Panel
14. Stop Switch

		A	B	C	D	E	F	G	H	I1	I2	J1	J2	K1	K2	L1	L2	M1	M2	OM3	O1	O2	P1	P2	Q1	Q2	R1	R2	R3
20S	MM	1112	711	720	781	1170	993	353	423	502	1048	225	1003	101	1028	146	930	229	90	70	70	826	419	1035	330	1023	355	1048	1023
	INCH	43 3/4	28	28 3/8	30 3/4	46	39 1/8	13 7/8	16 5/8	19 3/4	41 1/4	8 7/8	39 1/2	4	40 1/2	5 3/4	36 5/8	9	3 1/2	2 3/4	2 3/4	32 1/2	16 1/2	40 3/4	13	40 1/4	14	41 1/4	40 1/4
30S	MM	1222	794	872	935	1409	1103	348	420	588	1159	225	1112	101	1137	146	1041	229	90	70	70	936	502	1146	416	1133	441	1159	1133
	INCH	48 1/8	31 1/4	34 3/8	36 3/4	55 1/2	43 3/8	13 3/4	16 1/2	23 1/8	45 5/8	8 7/8	43 3/4	4	44 3/4	5 3/4	41	9	3 1/2	2 3/4	2 3/4	36 7/8	19 3/4	45 1/8	16 3/8	44 5/8	17 3/8	45 5/8	44 5/8
40S	MM	1410	970	901	954	1477	1290	475	546	657	1347	300	1228	175	1324	175	1228	270	111	70	70	1094	572	1334	486	1321	511	1347	1321
	INCH	55 1/2	38 1/4	35 1/2	37 1/2	58 1/8	50 3/4	18 3/4	21 1/2	25 7/8	53	11 3/4	48 3/8	6 7/8	52 1/8	6 7/8	48 3/8	10 5/8	4 3/8	2 3/4	2 3/4	43 1/8	22 1/2	52 1/2	19 1/8	52	20 1/8	53	52
55S	MM	1410	970	1036	1100	1624	1290	475	546	657	1347	300	1228	175	1324	175	1228	270	111	70	70	1094	572	1334	486	1321	511	1347	1321
	INCH	55 1/2	38 1/4	40 3/4	43 1/4	64	50 3/4	18 3/4	21 1/2	25 7/8	53	11 3/4	48 3/8	6 7/8	52 1/8	6 7/8	48 3/8	10 5/8	4 3/8	2 3/4	2 3/4	43 1/8	22 1/2	52 1/2	19 1/8	52	20 1/8	53	52
65S	MM	1410	970	1110	1173	1697	1290	475	546	657	1347	300	1228	175	1324	175	1228	270	111	70	70	1094	572	1334	486	1321	511	1347	1321
	INCH	55 1/2	38 1/4	43 3/4	46 1/8	66 3/4	50 3/4	18 3/4	21 1/2	25 7/8	53	11 3/4	48 3/8	6 7/8	52 1/8	6 7/8	48 3/8	10 5/8	4 3/8	2 3/4	2 3/4	43 1/8	22 1/2	52 1/2	19 1/8	52	20 1/8	53	52

VISIT MAYTAGCOMMERCIALLAUNDRY.COM FOR MORE INFORMATION.

®/™ © 2020 Maytag. All rights reserved.

MY200028 9/20

MULTI-LOAD WASHERS

ON-PREMISES LAUNDRY – SOFT-MOUNT

MODEL	MYS20PN	MYS30PN	MYS40PN	MYS55PN	MYS65PN
CAPACITY					
Cylinder Volume – cu. ft. (liters)	2.6 (73)	4.6 (131)	6.0 (171)	8.1 (230)	9.3 (262)
Cylinder Diameter – in. (mm)	20.9 (530)	24.4 (620)	29.5 (750)	29.5 (750)	29.5 (750)
Cylinder Depth – in. (mm)	13.9 (352)	17.9 (454)	16.2 (411)	21.6 (548)	24.4 (621)
Dry Load Capacity – lb (kg)	20 (9)	30 (14)	40 (18)	55 (25)	65 (30)
SUSPENSION					
Max. Spin RPM / Maximum Extract G-Force	1,165 / 400	1,085 / 400	985 / 400	985 / 400	912 / 350
CONNECTIVITY					
USB Programmability	Yes	Yes	Yes	Yes	Yes
Built in WiFi*	Yes	Yes	Yes	Yes	Yes
DIMENSIONS					
Depth – in. (mm)	28.4 (721)	34.3 (872)	35.5 (901)	40.8 (1,037)	43.7 (1,110)
Width – in. (mm)	28.0 (710)	31.3 (795)	38.2 (970)	38.2 (970)	38.2 (970)
Height – in. (mm)	43.8 (1,112)	48.1 (1,222)	55.5 (1,410)	55.5 (1,410)	55.5 (1,410)
Door Opening – in. (mm)	12.9 (328)	16.1 (410)	18.1 (459)	18.1 (459)	18.1 (459)
CRATED DIMENSIONS					
Width – in. (mm)	29.8 (756)	33.1 (841)	39.5 (1,003)	39.5 (1,003)	39.5 (1,003)
Depth – in. (mm)	33.4 (854)	39.8 (1,010)	41.0 (1,042)	46.4 (1,178)	49.3 (1,251)
Height – in. (mm)	50.0 (1,270)	54.4 (1,381)	61.4 (1,560)	61.4 (1,560)	61.4 (1,560)
APPROXIMATE WEIGHT					
Uncrated – lb (kg)	415 (188)	582 (264)	851 (386)	894 (406)	944 (428)
Crated – lb (kg)	446 (202)	616 (279)	889 (403)	933 (423)	984 (446)
ELECTRICAL CONNECTION OPTIONS (VOLTS / Hz / PHASE)					
W = 120 / 60 / 1 (no electrical heating)	Yes	No	No	No	No
T = 208 – 240 / 60 / 1 (no electrical heating)	Yes	Yes	Yes	Yes	Yes
WATER HEATING OPTIONS					
Hot/Cold Water Connections Only	Yes	Yes	Yes	Yes	Yes
WATER, CHEMICAL DISPENSING, DRAINS					
Number of Water Inlets	2	2	2	2	2
Optional Third Water Inlet	Yes	Yes	Yes	Yes	Yes
Inlet Sizes – in. (mm)	3/4 (19)	3/4 (19)	3/4 (19)	3/4 (19)	3/4 (19)
Operating Pressure – psi (bar)	20 – 120 (1-8)	20 – 120 (1-8)	20 – 120 (1-8)	20 – 120 (1-8)	20 – 120 (1-8)
Number of Dispenser Compartments	4	4	4	4	4
External Chemical Connections, Number	10	10	10	10	10
Dump Valve Drain, Size – in. (mm)	Yes, 3 (76)	Yes, 3 (76)	Yes, 3 (76)	Yes, 3 (76)	Yes, 3 (76)
Second Dump Valve Drain Option	No	No	No	No	No
ENERGY STAR® CERTIFIED	Yes	Yes	Yes	Not Tested	Not Tested
SOUND PRESSURE – dBA	<70	<70	<70	<70	<70
MOTOR SIZE – hp	1.0	2.0	3.0	4.0	4.0

*WiFi required. Features subject to change.

See maytagcommerciallaundry.com for warranty details.

MYS20PN, MYS30PN, MYS40PN models only.

®/™ © 2020 Maytag. All rights reserved.
MY200028 9/20